Engineering Design Portfolio

Aayush Dayal

B.A.Sc. Mechanical Engineering Student at UBC

C. 250-575-4834

Email: aayushdayal2@gmail.com

LinkedIn: linkedin.com/in/aayushdayal

Table of Contents

S.No.	TITLE	SLIDE
1.	About Me	3
2.	Bike Fairing – OK Motorrad	4
3.	Wood-Working Gearbox	5
4.	Search & Rescue Helicopter	6
5.	Precision-Engineered Hobbyist Train	7
6.	Autonomous Path-Following Car	8
7.	CNC Machine Component	9
8.	Idealised 2D Truss	10

About Me

I'm a recent Mechanical Engineering graduate from UBC, with hands-on experience in CAD modelling, technical documentation, and QC/QA validation.

I thrive at product development, first-principles problem solving, and collaboration.

Whether developing sensor tracking systems for nuclear applications, aerodynamics optimization for competitive motorsports, or managing 6-figure capital assets. I excel at solving complex technical challenges and am eager to seek new ones.

Bike Fairing – OK Motorrad

What: Designed aerodynamic bike fairing for competitive motorsports

How:

- Drafted CAD model in SolidWorks Suite
- Performed FEA & aeroelastic deflection analysis
- Led CFD analysis using ANSYS Fluent with virtual wind tunnel testing
- Supervised 5 junior engineering students

Result:

- Achieved 15% drag reduction
- Improved team technical proficiency by 40%
- Completed comprehensive multi-physics simulation analysis

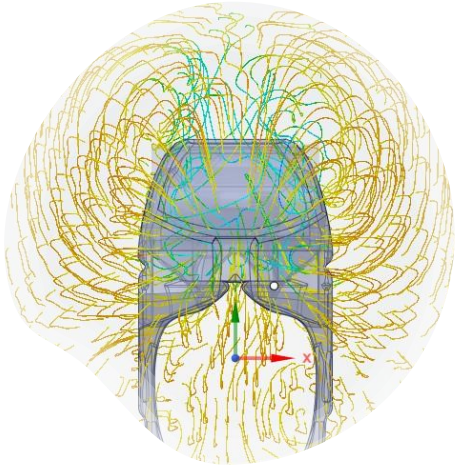

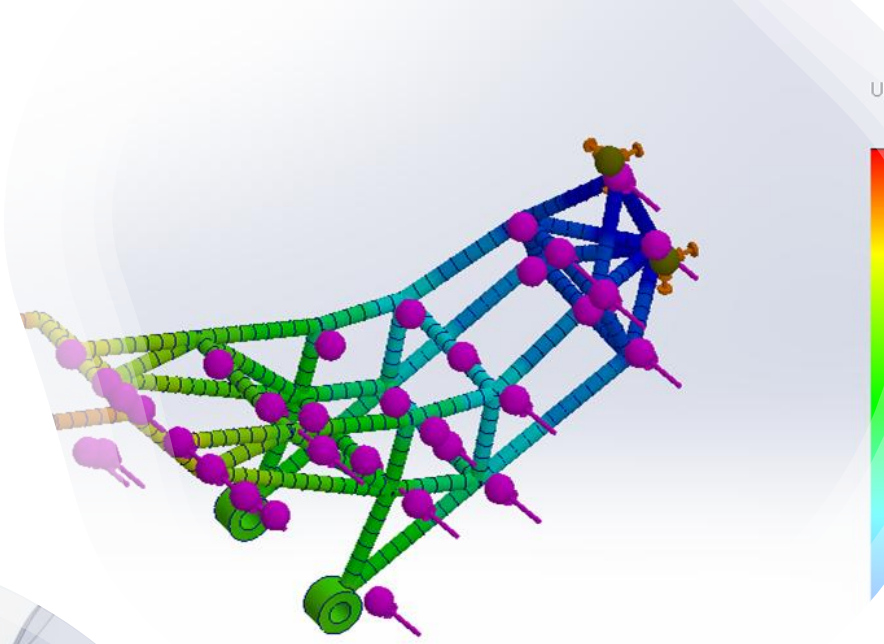

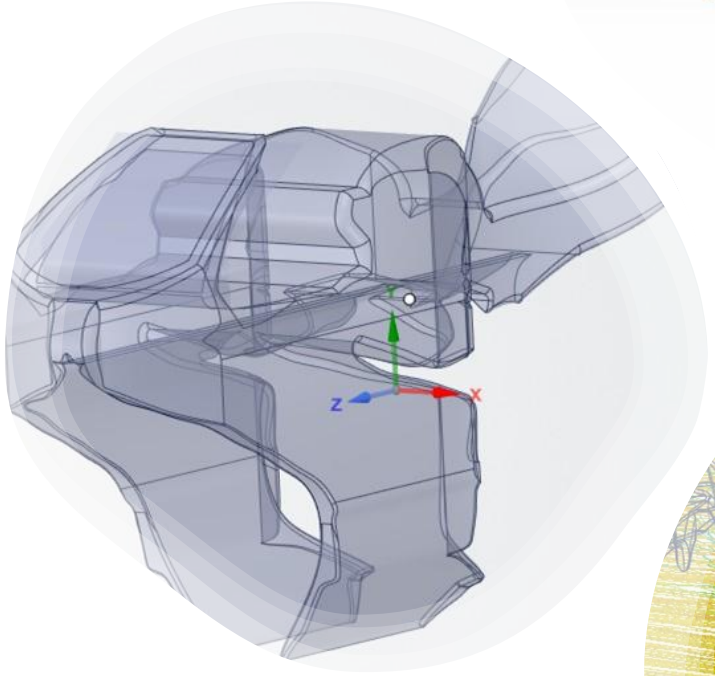

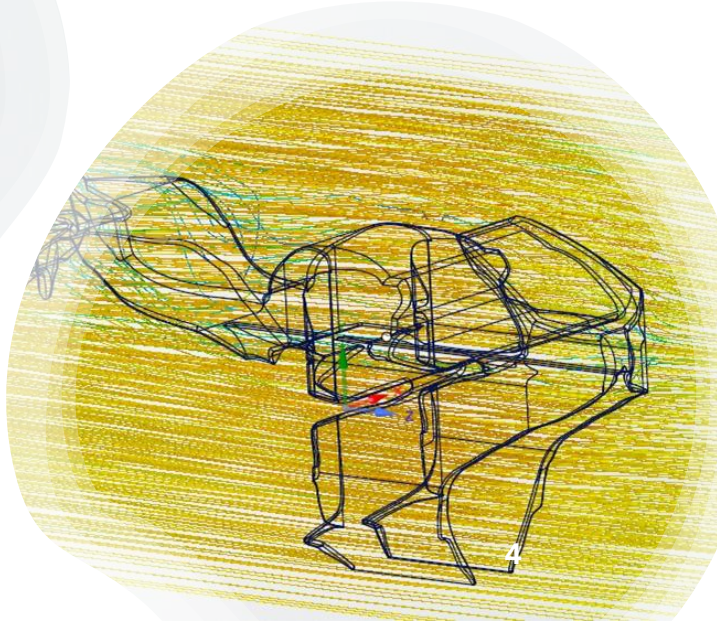

Wood-Working Gearbox

What: Designed compound reverted gearbox for power transmission

How:

- Performed stress analysis using Goodman criteria and FEA
- Led iterative design reviews and prototype development
- Collaborate on technical documentation, CAD models and part specifications

Result:

- Achieved 12 HP transmission capacity
- Delivered 9:1 reduction ratio
- Maintained safety factors > 2 for all components (shafts, gears, bearings)

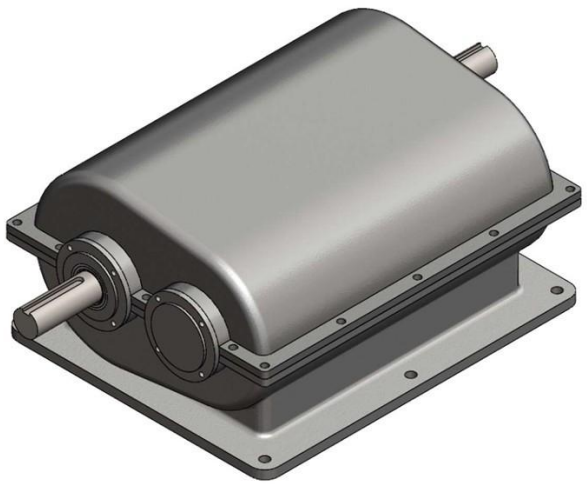

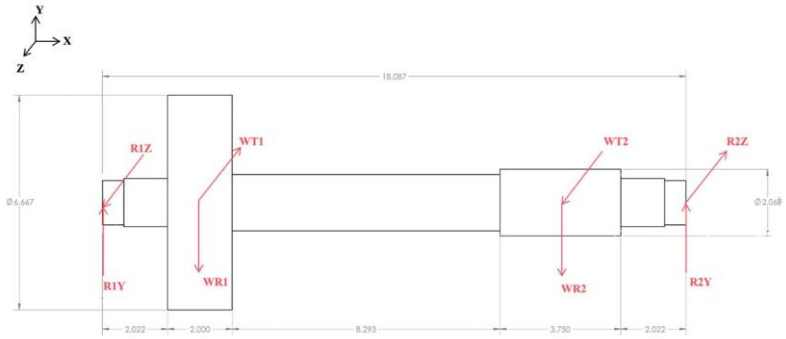

Figure 6: *Free-Body Diagram of Shaft 2.*

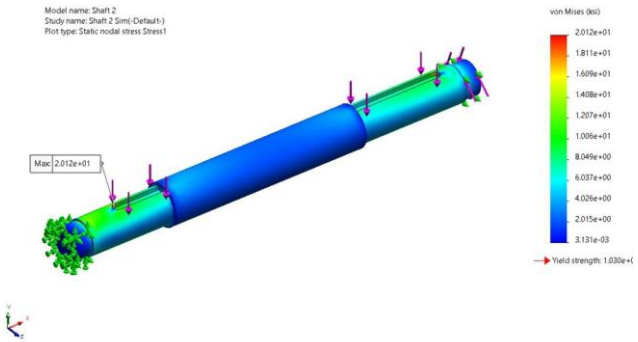

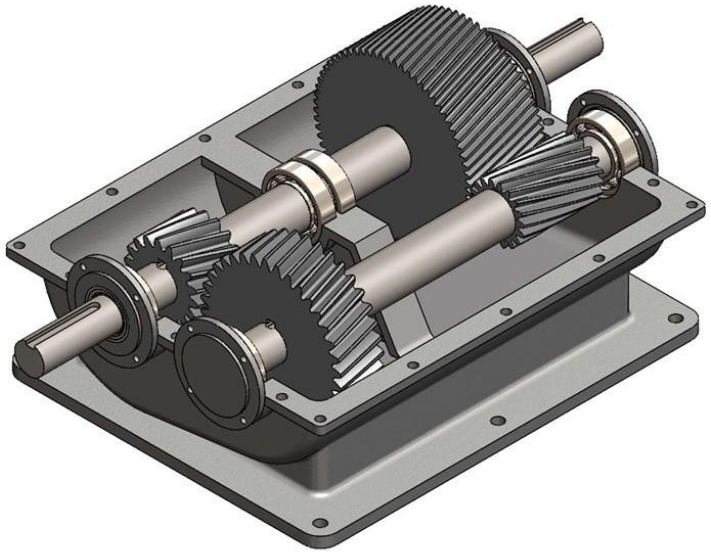

Search & Rescue Helicopter

What: Designed complete Revolution Mini 500 helicopter model

How:

- Used SolidWorks parametric modeling
- Developed surface model exoskeleton including cabin, doors, fin, tail, hood, skids with advanced surfacing tools
- Collaborated to create photorealistic renderings using SolidWorks Visualize and RealView Graphics

Result:

- Incorporated 100+ sub-parts
- Completed over 30+ hours of design work
- Produced high-quality visual presentations and animations

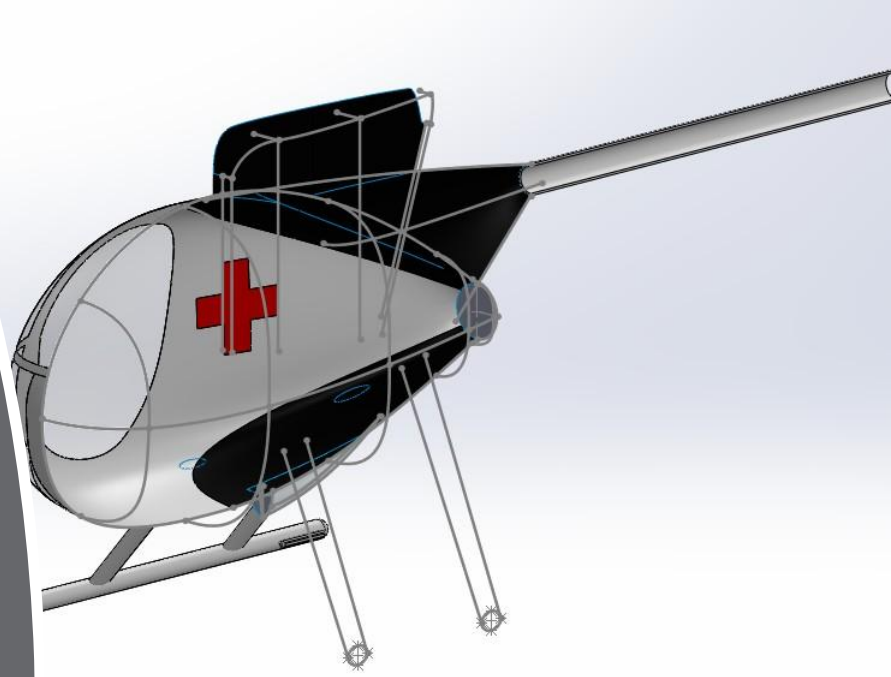

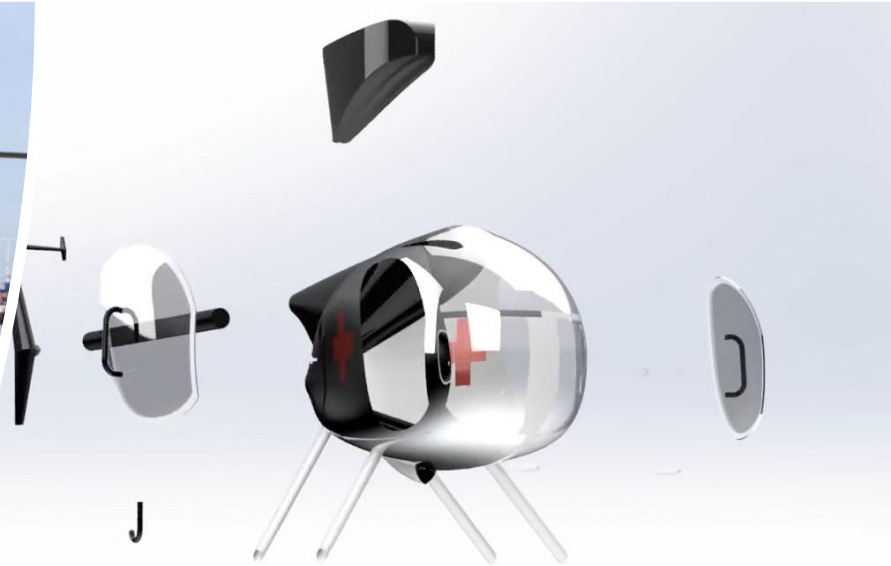

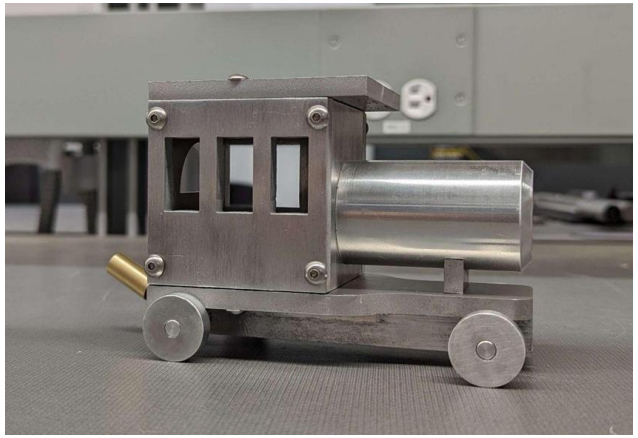

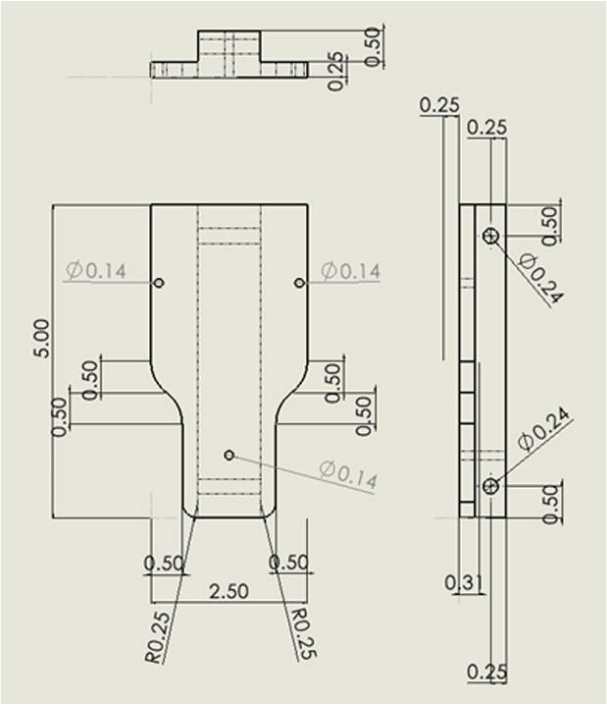

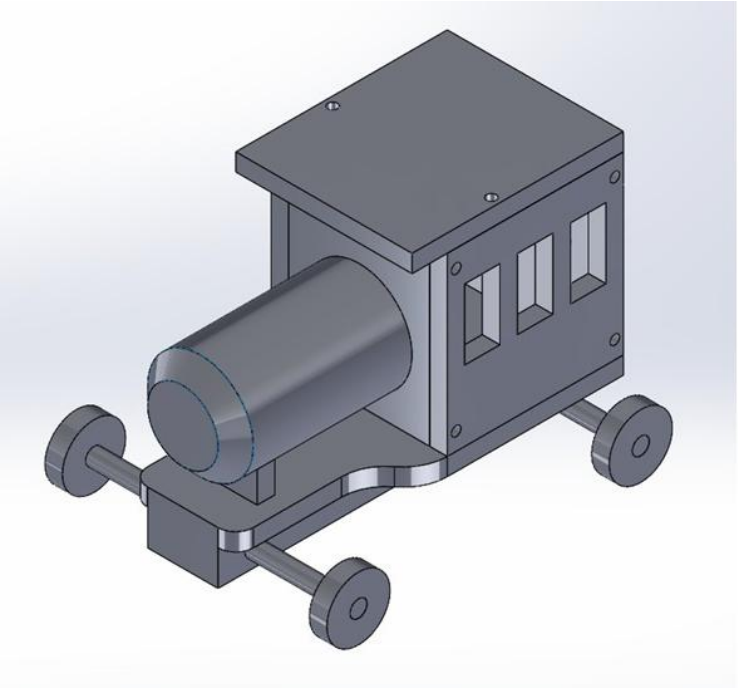

Figure 1. The manufacturing process flow chart

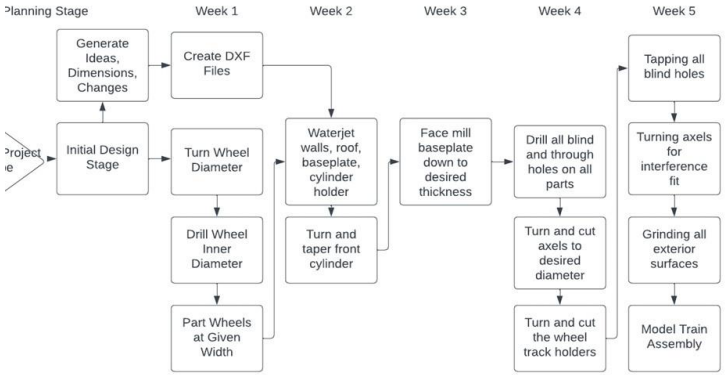

Precision-Engineered Hobbyist Train

What: Manufactured precision model train with multiple components

How:

- Developed comprehensive CAD models in SolidWorks and specified assembly sequences
- Operated industrial equipment (3-axis CNC mills, engine lathes, waterjet cutting, machining tools)
- Implemented RCCA protocols for quality control
- Performed CMM inspection and functional testing

Result:

- Achieved zero assembly conflicts across 15 interconnected components
- Maintained precision machining tolerances
- Validated fit and function requirements through comprehensive testing

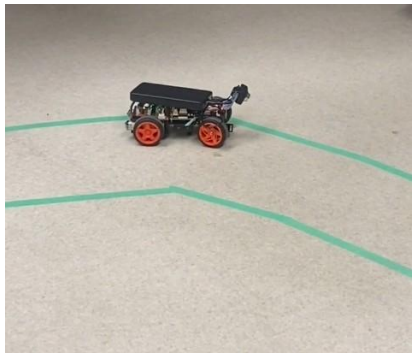

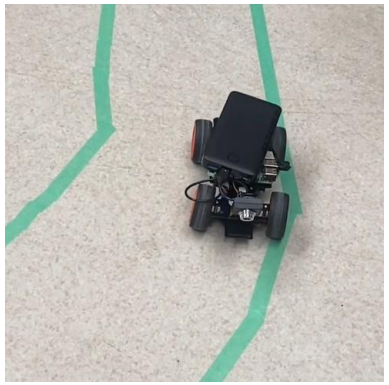

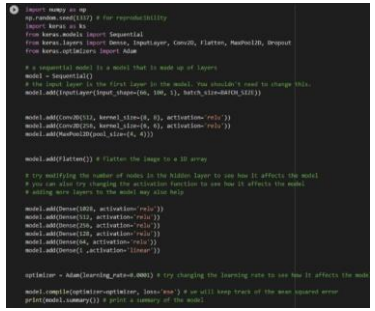

```
import numpy as np
np.random.seed(1337) # for reproducibility
import keras as ks
from keras.models import Sequential
from keras.layers import Dense, InputLayer, Conv2D, Flatten, MaxPool2D, Dropout
from keras.optimizers import Adam

# a sequential model is a model that is made up of layers
model = Sequential()
# the input layer is the first layer in the model. You shouldn't need to change this.
model.add(InputLayer(input_shape=(66, 100, 1), batch_size=BATCH_SIZE))


model.add(Conv2D(512, kernel_size=(8, 8), activation='relu'))
model.add(Conv2D(256, kernel_size=(6, 6), activation='relu'))
model.add(MaxPool2D(pool_size=(4, 4)))


model.add(Flatten()) # flatten the image to a 1D array

# try modifying the number of nodes in the hidden layer to see how it affects the model
# you can also try changing the activation function to see how it affects the model
# adding more layers to the model may also help

model.add(Dense(1028, activation='relu'))
model.add(Dense(512, activation='relu'))
model.add(Dense(256, activation='relu'))
model.add(Dense(128, activation='relu'))
model.add(Dense(64, activation='relu'))
model.add(Dense(1 ,activation='linear'))


optimizer = Adam(learning_rate=0.0001) # try changing the learning rate to see how it affects the mod

model.compile(optimizer=optimizer, loss='mse') # we will keep track of the mean squared error
print(model.summary()) # print a summary of the model
```

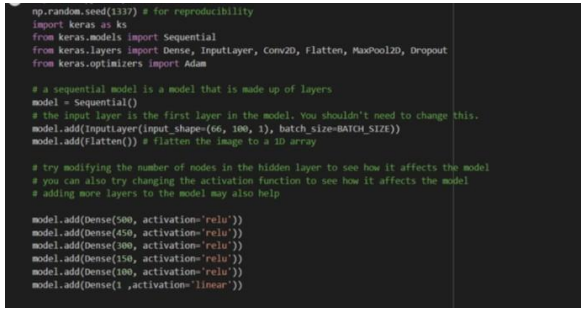

```
np.random.seed(1337) # for reproducibility
import keras as ks
from keras.models import Sequential
from keras.layers import Dense, InputLayer, Conv2D, Flatten, MaxPool2D, Dropout
from keras.optimizers import Adam

# a sequential model is a model that is made up of layers
model = Sequential()
# the input layer is the first layer in the model. You shouldn't need to change this.
model.add(InputLayer(input_shape=(66, 100, 1), batch_size=BATCH_SIZE))
model.add(Flatten()) # flatten the image to a 1D array

# try modifying the number of nodes in the hidden layer to see how it affects the model
# you can also try changing the activation function to see how it affects the model
# adding more layers to the model may also help

model.add(Dense(500, activation='relu'))
model.add(Dense(450, activation='relu'))
model.add(Dense(300, activation='relu'))
model.add(Dense(150, activation='relu'))
model.add(Dense(100, activation='relu'))
model.add(Dense(1 ,activation='linear'))
```

Autonomous Path-Following Car

What: Developed autonomous vehicle navigation system

How:

- Trained multi-layer neural network with fine-tuned parameters
- Implemented loss optimization using stochastic gradient descent and backpropagation
- Used CNN architecture with pooling layers

Result:

- Enhanced model accuracy through optimization
- Reduced model complexity
- Boosted predictive performance

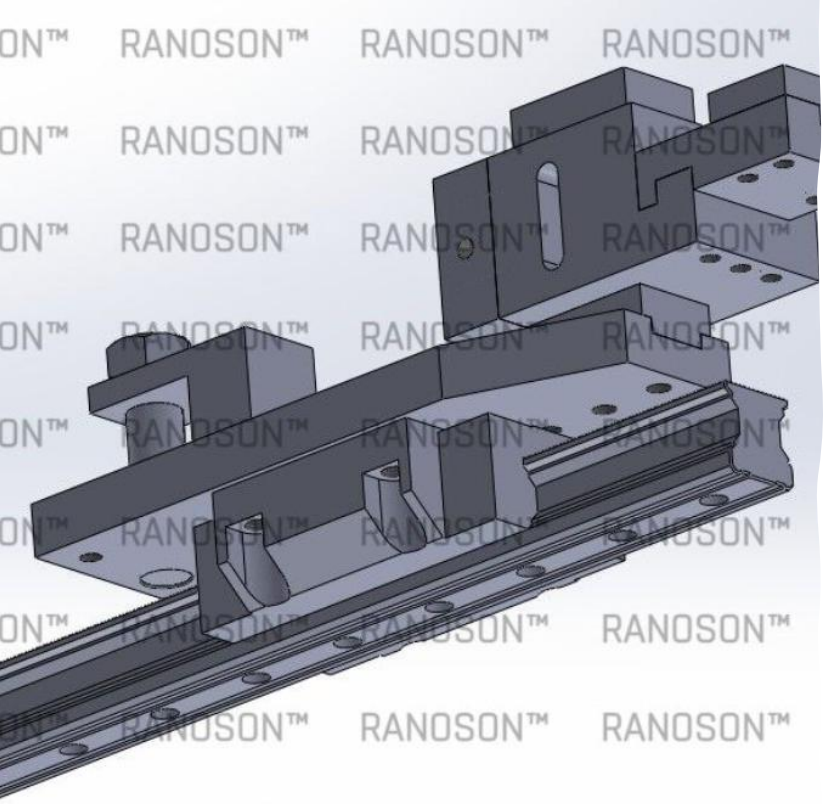

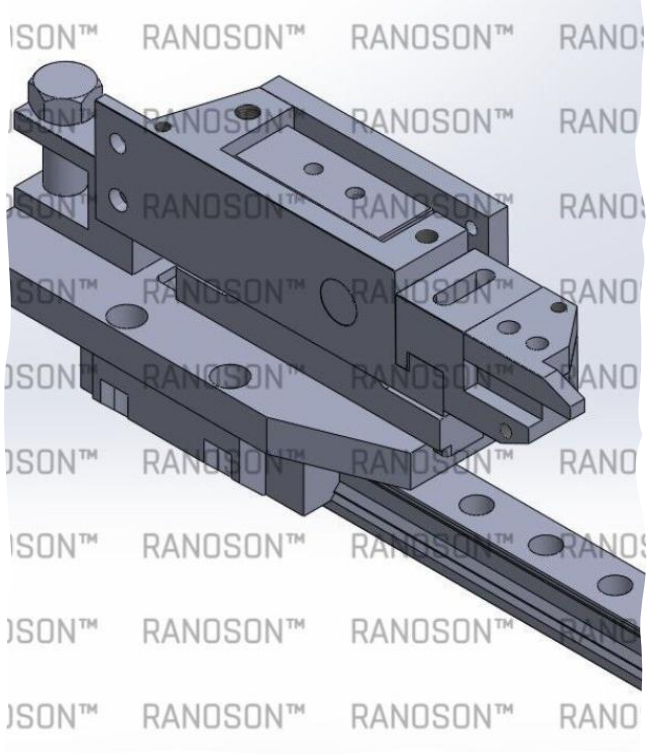

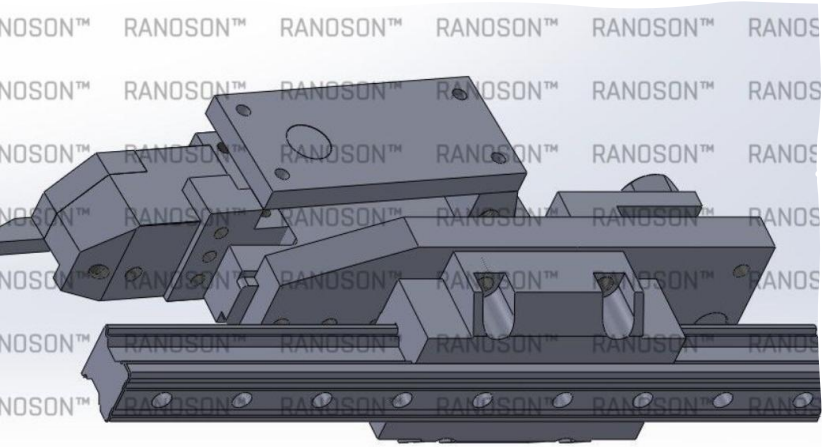

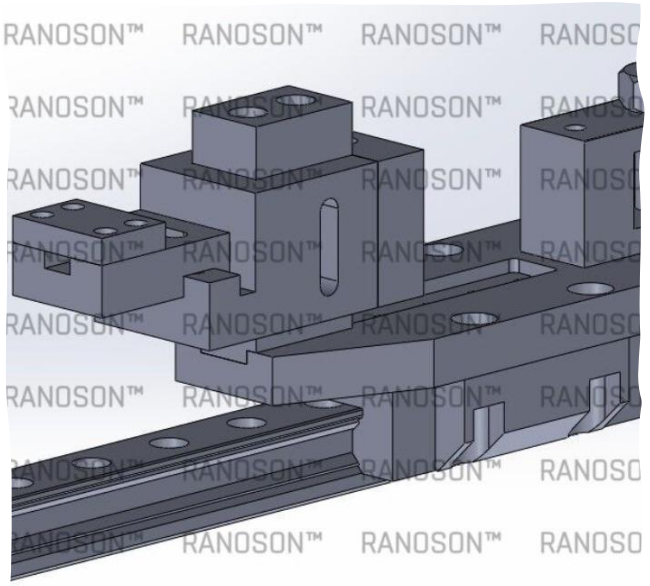

CNC Machine Component

What: Optimized CNC machining components, processes, and quality control

How:

- Performed GD&T quality control validation on CNC machine component drawings
- Optimized sheet metal workflows with advanced CAD techniques
- Maintained ASME Y14.5 standards

Result:

- Updated 25+ legacy blueprints
- Improved design accuracy
- Expedited production by 30% with fine tolerances
- Eliminated 90% of technical drawing discrepancies

```
Enter applied force magnitude: 50000
Enter applied force angle from horizontal axis in degrees (0-360): 1
Enter the angle of the wall that the roller support at node 1 is aga

Enter coordinates for each node (x,y):
Enter coordinates for Node 1 as [x,y]: [0,0]
Enter coordinates for Node 2 as [x,y]: [0,20]
Enter coordinates for Node 3 as [x,y]: [30,25]
Enter coordinates for Node 4 as [x,y]: [20,5]

Nodal Displacements:
Node 1: dx = -0.267618, dy = 0.137370
Node 2: dx = 0.000000, dy = 0.000000
Node 3: dx = 1.619334, dy = -2.992845
Node 4: dx = 1.666063, dy = -3.284923

Reaction Forces:
Node 1 (Roller): Rx = 47041.93, Ry = 32376.47
Node 2 (Fixed): Rx = -49551.27, Ry = -8258.55

Element Stresses:
Element A: 0.00 PSI
Element B: 49551.27 PSI
Element C: 64233.39 PSI
Element D: 68036.42 PSI
Element E: 28315.01 PSI
```

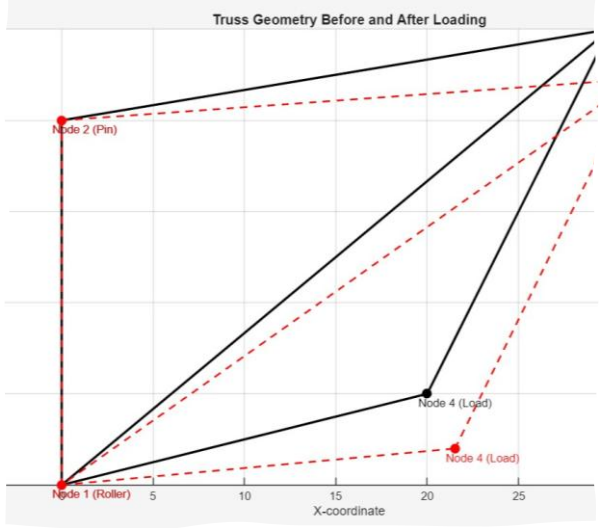

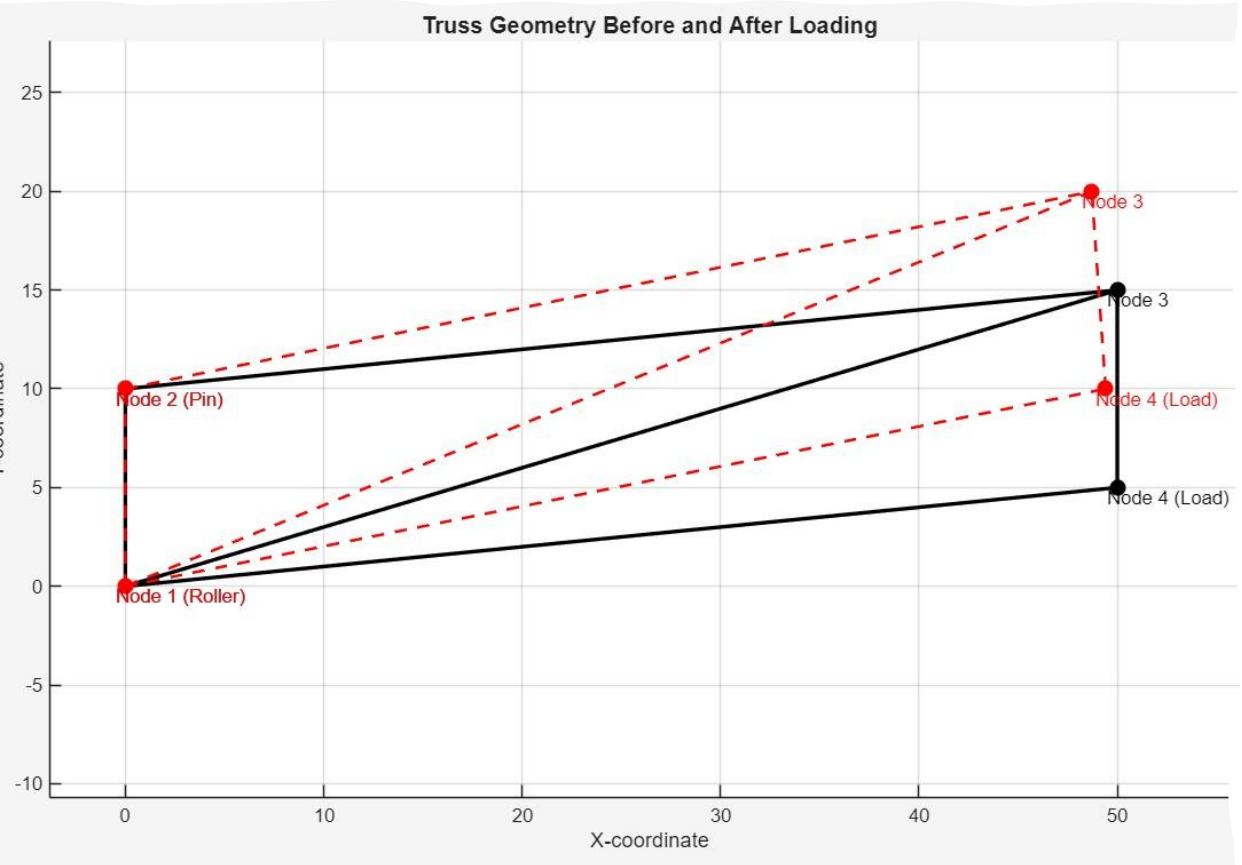

Idealised 2D Truss

What: Developed structural analysis program for truss system

How:

- Programmed MATLAB for FEA on a 5-member truss
- Implemented finite element methodology using stiffness matrix assembly
- Used coordinate transformation algorithms and matrix partitioning

Result:

- Created interactive GUI interface
- Achieved accurate nodal displacement and element stress calculations
- Enabled real-time parameter adjustments
- Generated comparative visualizations of deformed/undeformed geometries for structural performance analysis